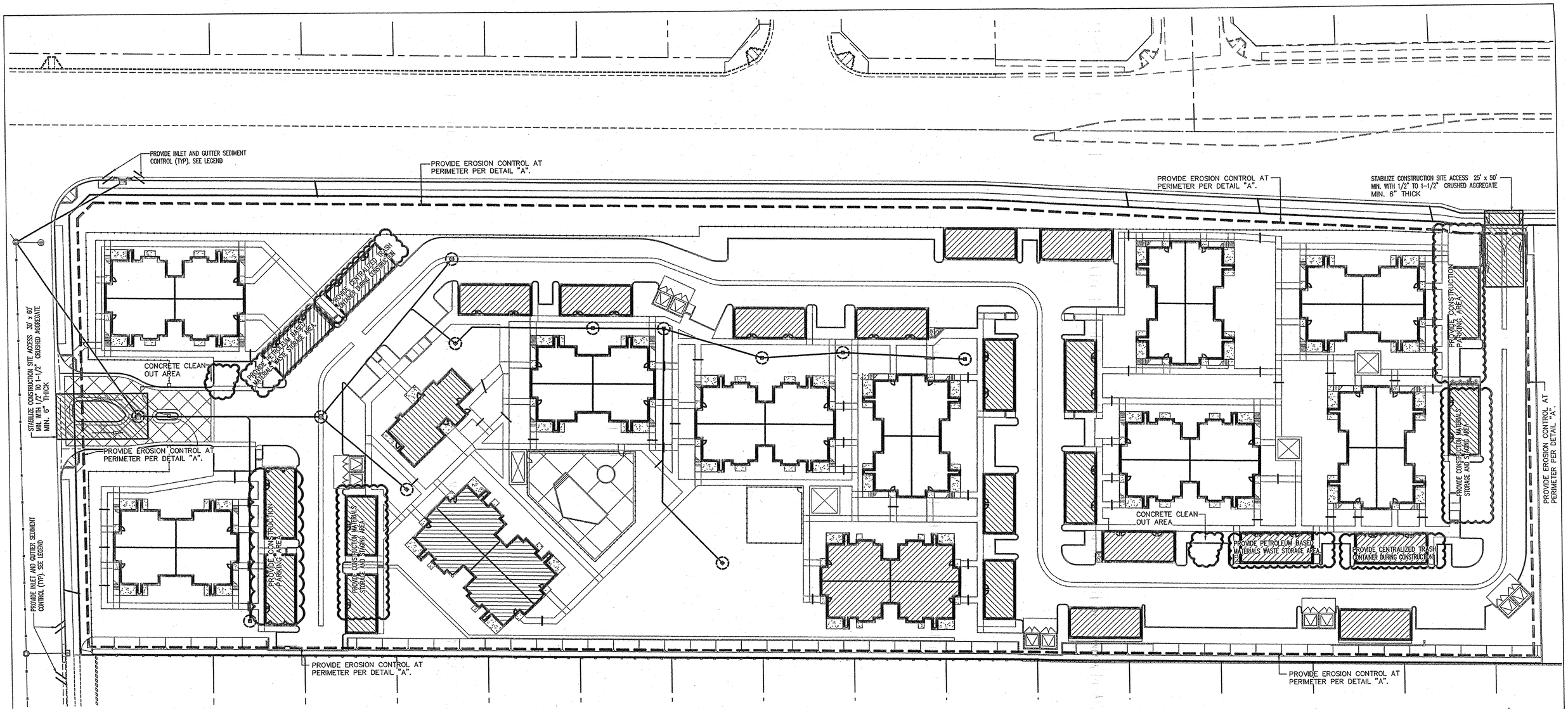

DETAIL "A" EROSION CONTROL

LEGEND:

- INSTALL AND MAINTAIN WEIGHTED STRAW WADDLE OR EQUIVALENT CURB PROTECTION
- INSTALL AND MAINTAIN WEIGHTED STRAW WADDLE OR EQUIVALENT EROSION CONTROL CONTINUOUSLY AT PERIMETER OF PROJECT. SEE DETAIL 'A'.
- PROPOSED DIRECTION OF FLOW
- INSTALL AND MAINTAIN PROPOSED INLET PROTECTION AS SHOWN

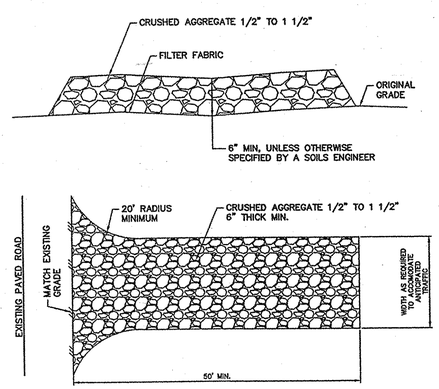

CONSTRUCTION ENTRANCE/EXIT
NOT TO SCALE

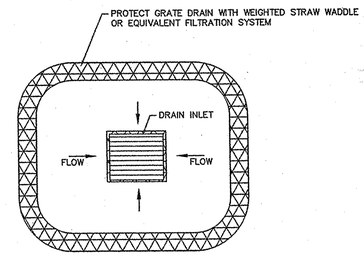

GRATE DRAIN INLET
NOT TO SCALE

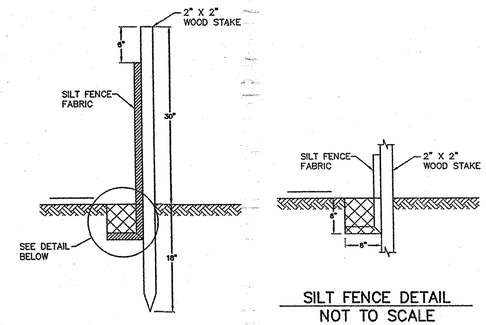

SILT FENCE DETAIL
NOT TO SCALE

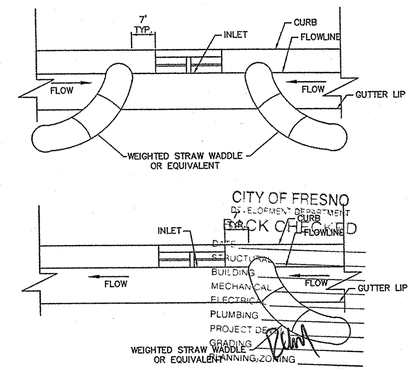

STORM DRAIN INLET PROTECTION
NOT TO SCALE

SCALE: 1" = 30'
0 15 30 60

APN: 506-010-04

YAMABE & HORN ENGINEERING, INC. CIVIL ENGINEERS – LAND SURVEYORS 1300 E. SHAW AVE, SUITE 176, FRESNO, CALIFORNIA 93710 PHONE: (559) 244-3123 FAX: (559) 244-3120	DR. BY: BR CH. BY: PR DATE: 04/25/08 REV. JOB No. 04-183 04183ECP.DWG	PROJECT TITLE ASHWOOD PROPERTY POLK & HERNDON AVE. CITY OF FRESNO	
		SHEET DESCRIPTION EROSION CONTROL PLAN	SHEET NO. 4 OF 4