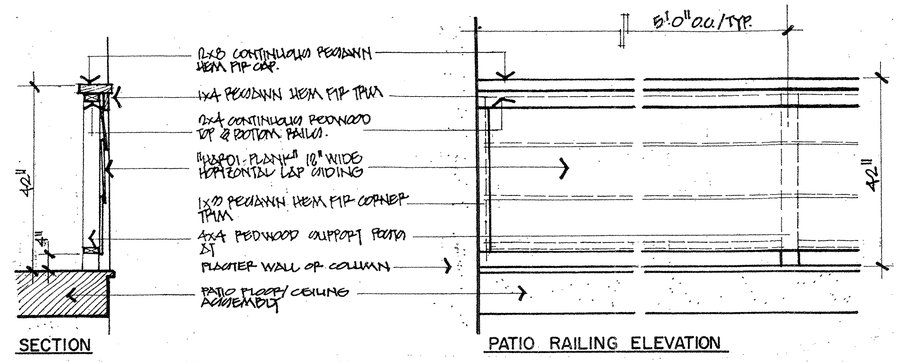

3 BALCONY RAILING DETAILS AND ELEVATION

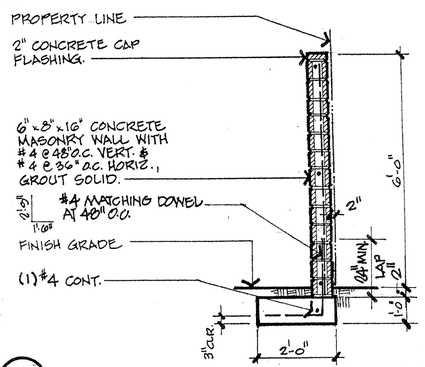

4 CONCRETE MASONRY WALL

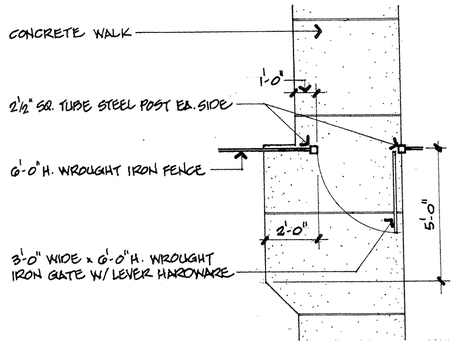

5 GATE CLEARANCE

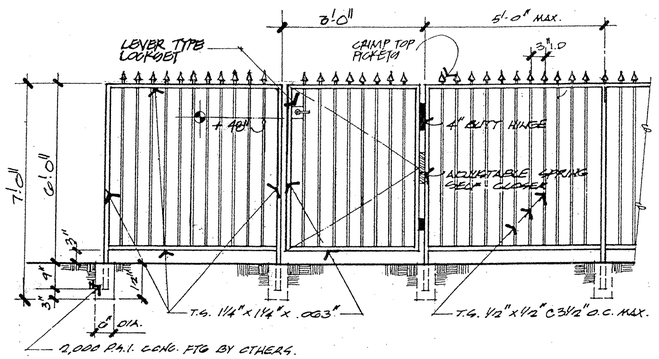

6 PERIMETER/STREET FRONTAGE FENCING

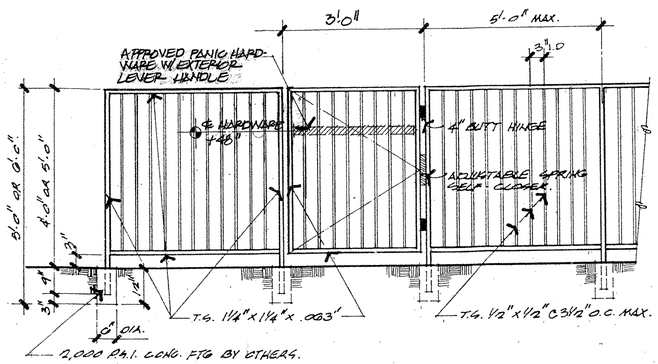

7 POOL/TOT LOT ENCLOSURE FENCING

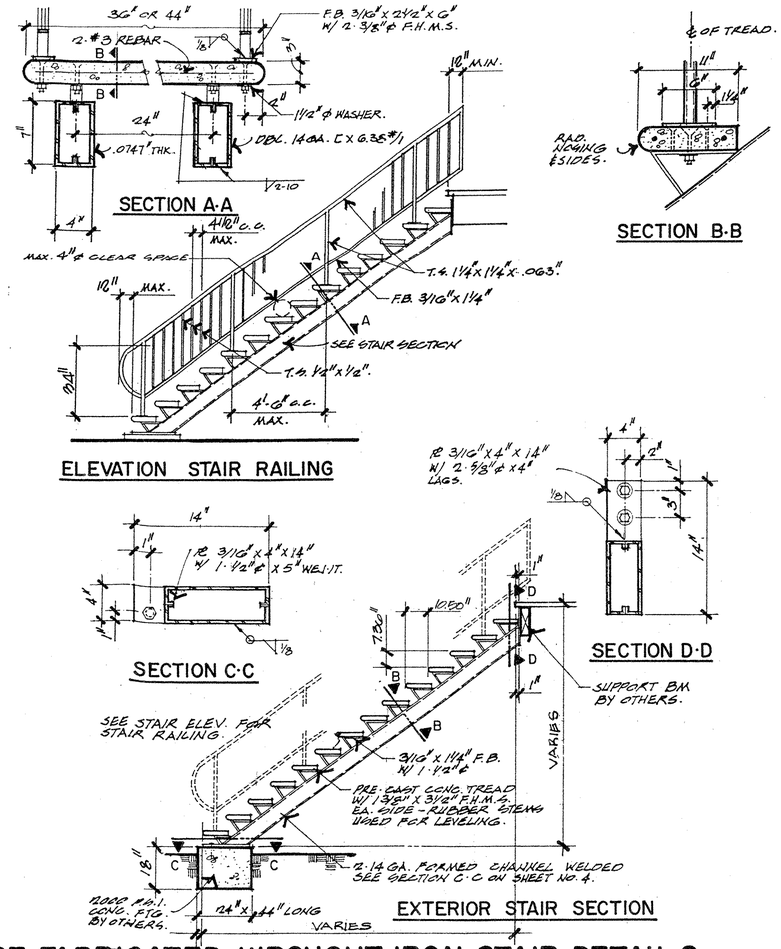

1 PRE-FABRICATED WROUGHT IRON STAIR DETAILS

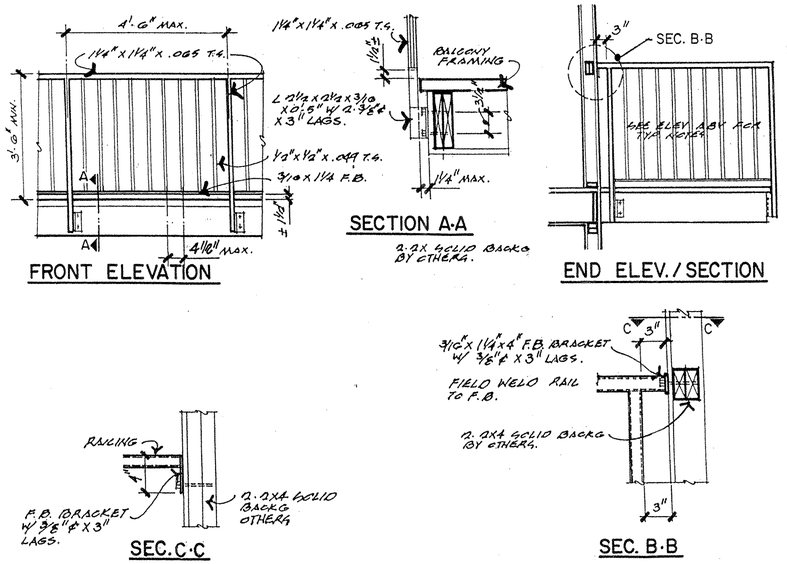

2 PRE-FABRICATED WROUGHT IRON RAIL DETAILS

THE VINCENT COMPANY
ARCHITECTURE • PLANNING
1500 West Shaw, Ste. 304
Fresno, California 93711
Phone: 559.225.2602

Revisions | Date

PROPOSED APARTMENTS FOR:

MR. ANTHONY LAMBE

5430 WEST PALO ALTO AVENUE
FRESNO, CALIFORNIA 93720

Project Architect:

REGISTERED ARCHITECT SCOTT A. VINCENT Exp. 12/31/05 No. C-15290 STATE OF CALIFORNIA

Issuances:	Date:
○ DESIGN REVIEW	
● PLAN CHECK	11.07.05
○ BACK CHECK	
○ PERMITS	
○ CONSTRUCTION	
○ AS BUILT	

All drawings and written material appearing herein constitute original work of the architect and may not be duplicated, used, or disclosed without written consent of the architect.

Reference North:

Scale: AS NOTED

Project Name: LAMBE APARTMENTS
FRESNO, CALIFORNIA

Project Number: 240723

Plot Date: 8/23/05

Sheet Number:

A3

Of . Sheets .